CALIFORNIA DYNAMICS CORPORATION
5572 ALHAMBRA AVE.
LOS ANGELES, CA. 90032-3106

CALL US – TO SET THINGS RIGHT
FAX (323) 223 – 7941
PH (323) 223 – 3882
email: caldyn@earthlink.net

TYPE HH30

15° TILT
1½" COMBINATION HANGER
SPRING & NEOPRENE

FILE 596 10/09/02

JOB:

CUST:

ENG'R:

TAG:

DEF'L:

DATE:

Type HH30 is used where uncertain alignment is anticipated during installation. At normal load , the hanger rod will operate to a full 15° Tilt in any direction from vertical centerline.

Isolator Selection & Loc .

BASIC HH30 HANGER

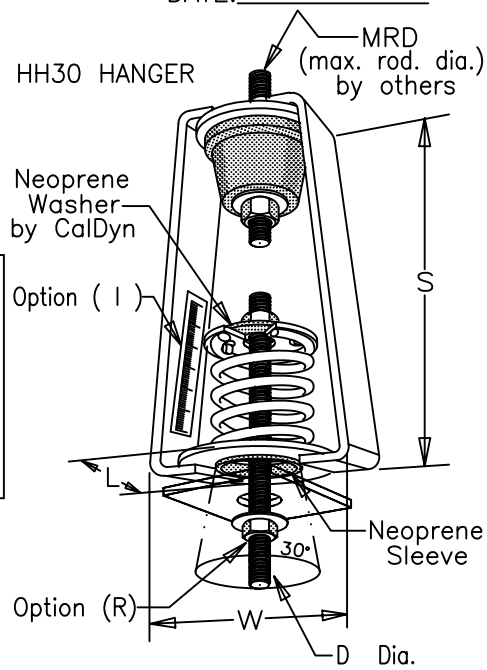

HANGER NO. Max. Load (lbs)	RATED DEFL.	DIMENSIONS (Inches)				
		W	L	S	MRD	D **
ET 42 ET 80 ET 129	1 - 1/2 1 - 1/2 1 - 1/2	3-1/2	3	6-1/2	3/8	3/8
ET 194 ET 255	1 - 1/2 1 - 1/2	4	3	7-/12	5/8	1/2
ET 347	1 - 1/2					5/8
ET 473	1 - 1/2	4-1/2	3-3/4	9	7/8	
ET 667	1 - 1/2					3/4
ET 940	1 - 1/2	5	4-1/4	9		
E 830 * E 1000 *	1 - 1/2 1 - 1/2	7-3/8	4	12-1/2		
E 1432 * E 2000 * E 2864 *	1 - 1/2 1 - 1/2 1 - 1/2	8-3/8	4	12-3/4	1	1

Spring rated Deflection 1" + Neoprene rated Deflection ½"

* The housings of these units are specially reinforced for extra strength.

** The precompression rod is furnished with units which have the "R" option. This rod will extend about 3" below the bottom of the hanger housing

EXTRA STRENGTH HH30 HANGER

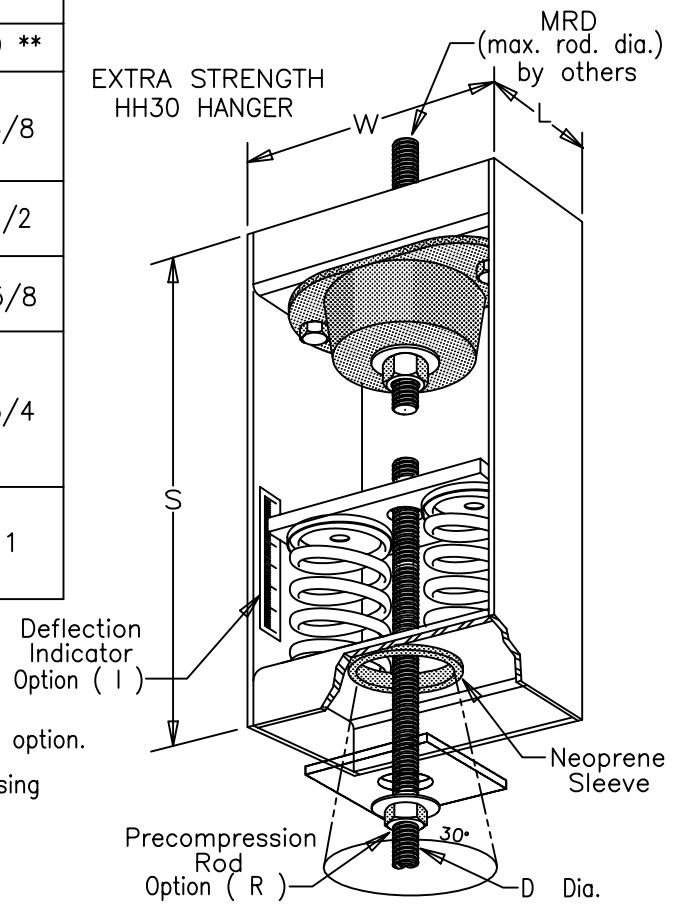

TYPICAL CALLOUT : HH30 – R I – ET 255
Type – (Options) – (Size)